R - 03

GENERAL DRAWING : FLAT RETURN ROLLER

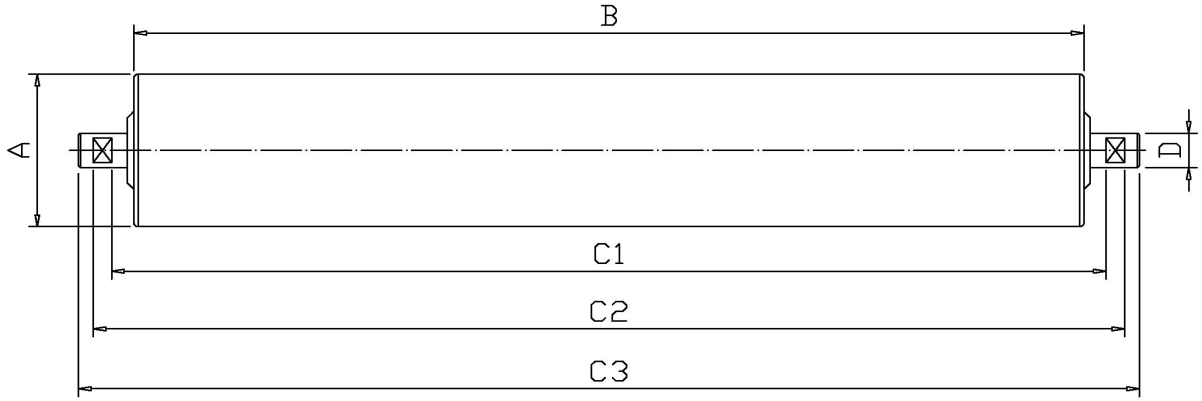

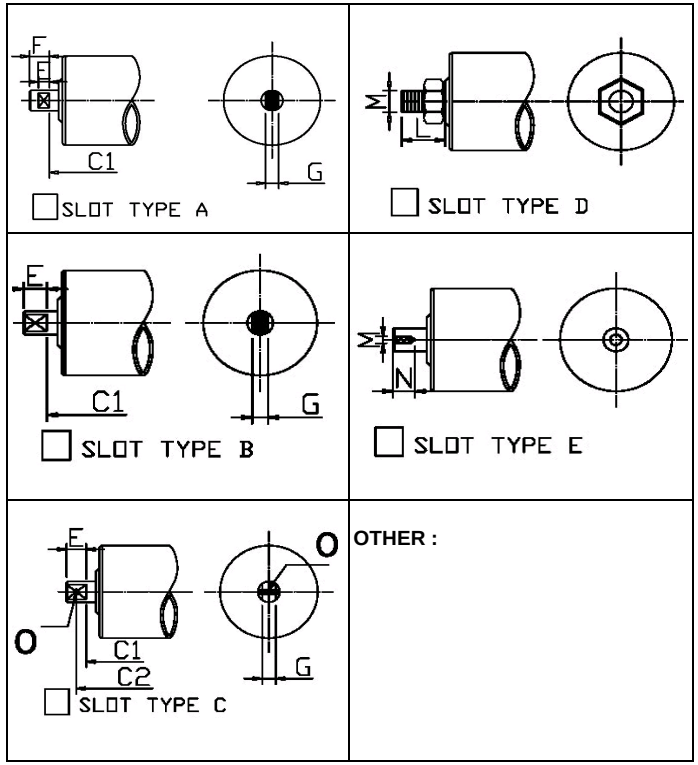

CUSTOMER	:
LOCATION	:
PIC NAME	:
TEL	:
EMAIL	:
INQUIRY REF.	:
DATE	:

CONVEYOR DATA

CONVEYOR CAPACITY	TPH
MATERIAL	
BELT SPEED	m/sec
BELT MASS	kg/m
BELT TENSION	kN
BELT TYPE	FABRIC
	STEEL CORD
RETURN IDLER SPACING	mm

REMARKS :

SPECIFICATION

PART NO	BELT WIDTH	MATERIAL		SLOT TYPE	BEARING	A	B	C1	C2	C3	D	E	F	G	L	M	N	O
		STEEL	HDPE															